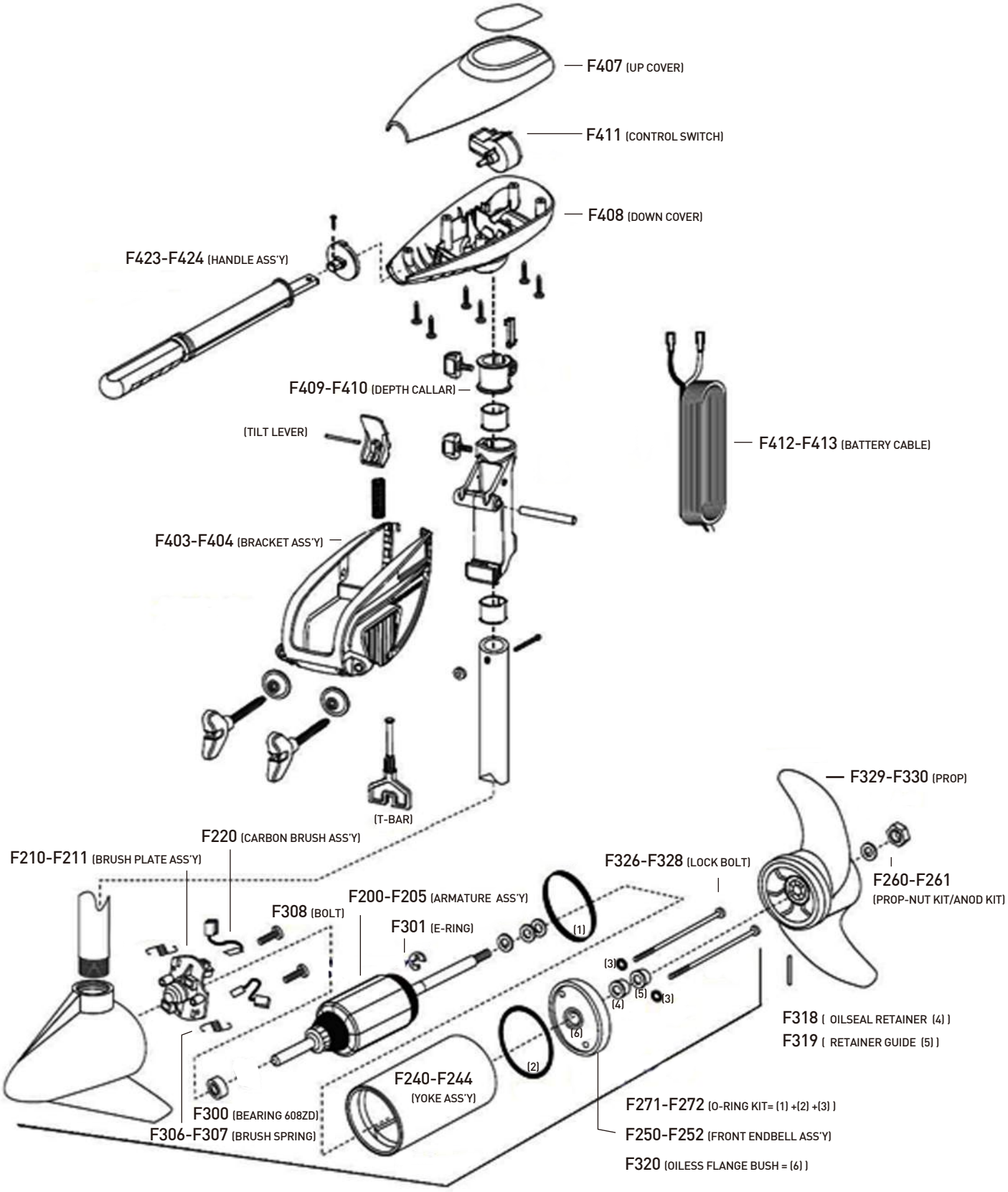FLOVER Electric outboard motor SCHEMATICS